martec international

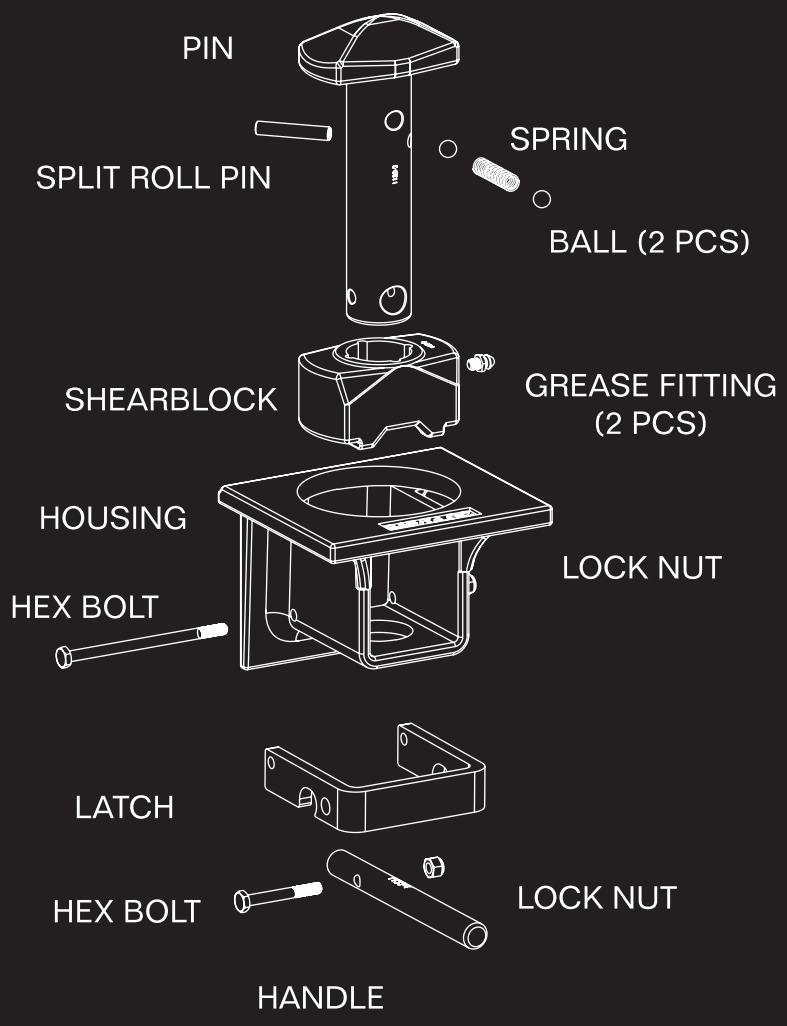

TWISTLOCK PARTS CATALOG

Q4 2023

800.8.MARTEC

MARTECINTL.COM

martec international

Elizabeth, New Jersey
529 Dowd Ave • Elizabeth, NJ 07201
Phone: 908.248.9001
Fax: 908.248.9020

Los Angeles
16518 S. Main St • Carson CA 90248
Phone: 562.531.1161
Fax: 562.531.1189

Chicago
17311 Martec Intl Blvd • Country Club Hills, Il 60478
Phone: 708.957.7311
Fax: 708.957.9183

Houston
10000 Wallisville Road • Houston, TX 77013
Phone: 713.675.7989
Fax: 713.675.8987

Miami
660 W 18th St • Hialeah, FL 33010
Phone: 305.887.9737
Fax: 305.887.9732

Savannah
190 Gulfstream Rd. • Savannah, GA 31408
Phone: 912.675.3219

martec international

MARTEC #:
169051773
DCLI #:
59-40-102
TRAC #:
1107-1344
NewLife #:
1310447

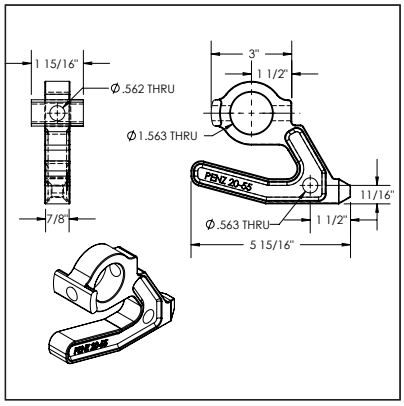

DESCRIPTION:
Twistlock, Handle, 1/2" Bolt, Replaces 20-55

MARTEC #:
169051563
DCLI #:
59-40-119
TRAC #:
1464-4
NewLife #:
1310448

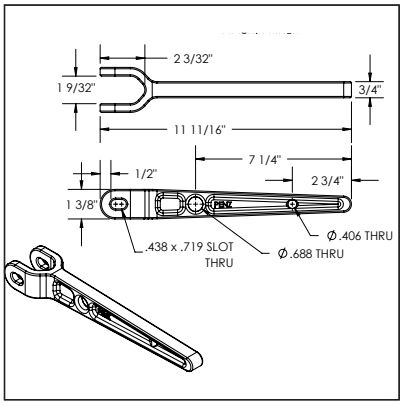

DESCRIPTION:
Twistlock Handle 905-156-003

MARTEC #:
169052281
DCLI #:
59-40-120
TRAC #:
1259-4
NewLife #:
1310622

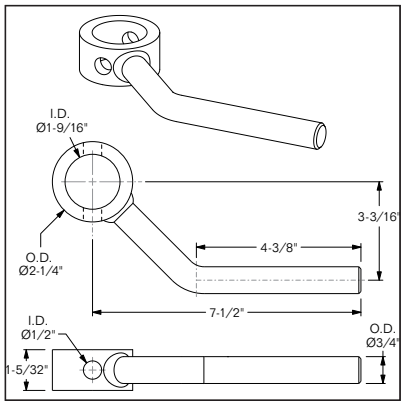

DESCRIPTION:
Twistlock, Handle, Drop-In, Replaces 20-57

MARTEC #:
202058
DCLI #:
TRAC #:
1107-1561
NewLife #:
1310450

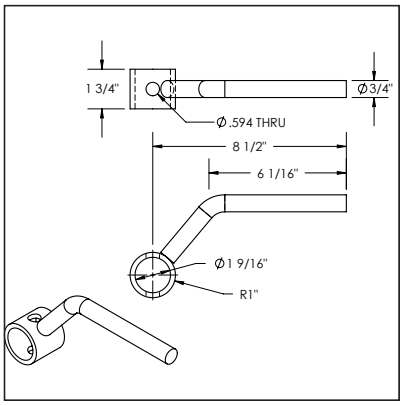

DESCRIPTION:
Twistlock, Handle, Replaces 20-58, 1107-1561

MARTEC #:
202084
DCLI #:
59-10-108
TRAC #:
1106-1469
NewLife #:
1310598

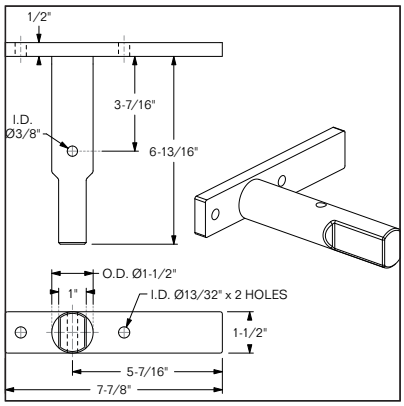

DESCRIPTION:
Twistlock, Front pin assy., Replaces 20-84

MARTEC #:
202098LH
DCLI #:
59-40-125
TRAC #:
1107-1269-L
NewLife #:
1310469

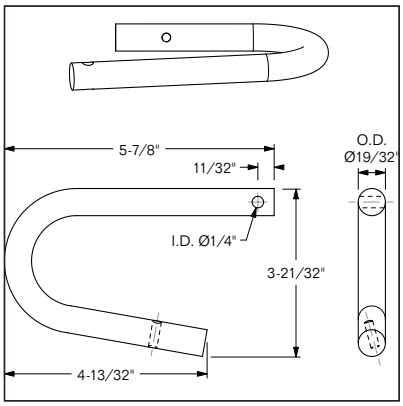

DESCRIPTION:
Twistlock, Handle, Replaces 20-98-LH

MARTEC #:
202098RH
DCLI #:
59-40-126
TRAC #:
1107-1269-R
NewLife #:
1310470

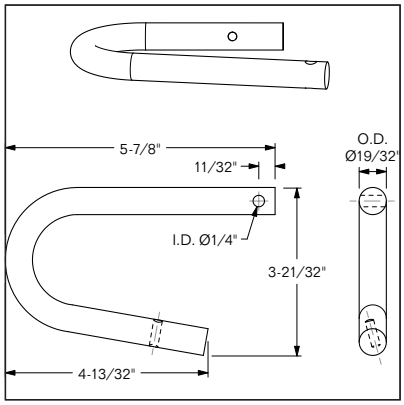

DESCRIPTION:
Twistlock, Handle, Replaces 20-98-RH

MARTEC #:
20BUF1341
DCLI #:
TRAC #:
1107-1341
NewLife #:
1310508

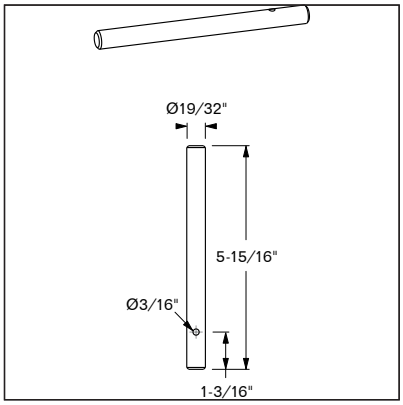

DESCRIPTION:
Twistlock Handle For Pinlock MI-90

MARTEC #:
2020108LH
DCLI #:
59-40-107
TRAC #:
1107-1400-L
NewLife #:
1310612

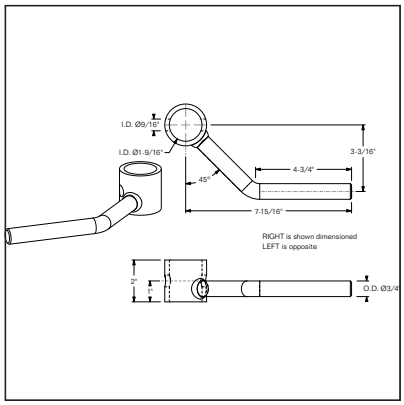

DESCRIPTION:
Twistlock, Handle, (Hyundai)

MARTEC #:
2020108RH
DCLI #:
59-40-108
TRAC #:
1107-1400-R
NewLife #:
1310613

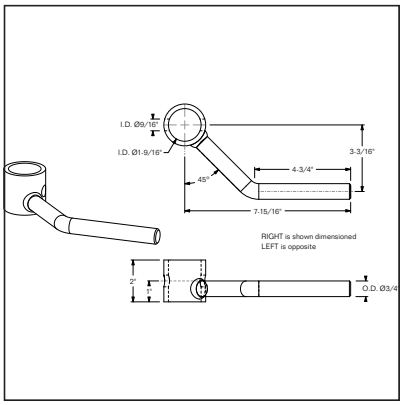

DESCRIPTION:
Twistlock, Handle, (Hyundai)

MARTEC #:
2020113L
DCLI #:
59-40-109
TRAC #:
1107-1300-L
NewLife #:
1310471

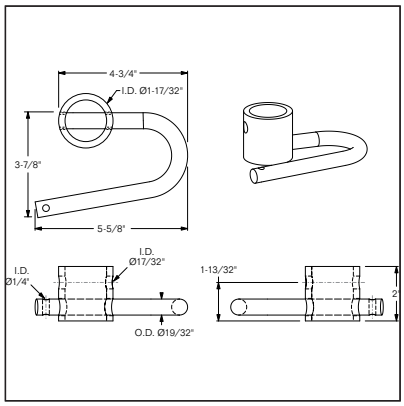

DESCRIPTION:
Twistlock, Handle, Replaces 20-113-LH

MARTEC #:
2020113R
DCLI #:
59-40-110
TRAC #:
1107-1300-R
NewLife #:
1310470

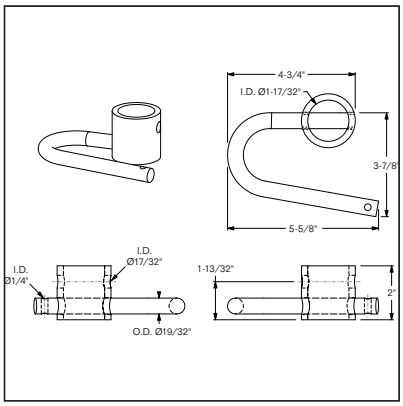

DESCRIPTION:
Twistlock, Handle, Replaces 20-113-RH

MARTEC #:
2020114LH
DCLI #:
59-40-111
TRAC #:
1107-1647-L
NewLife #:
1310607

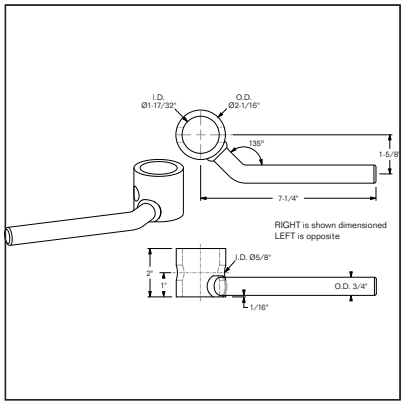

DESCRIPTION:
Twistlock, Handle, Replaces 20-114-LH

MARTEC #:
2020114RH
DCLI #:
59-40-112
TRAC #:
1107-1647-R
NewLife #:
1310608

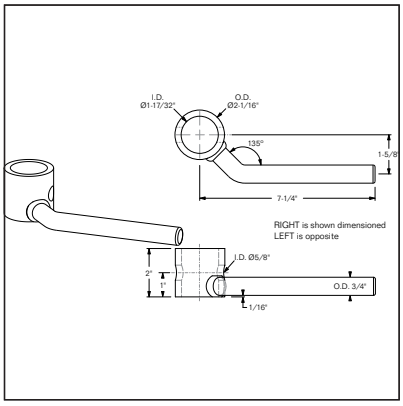

DESCRIPTION:
Twistlock, Handle, Replaces 20-114-RH

MARTEC #:
20BUF12074
DCLI #:
59-40-114
TRAC #:
1207-4
NewLife #:
1310483

DESCRIPTION:
Twistlock, Handle, Replaces 20-126 04-038

MARTEC #:
2020451
DCLI #:
59-40-202
TRAC #:
1107-1374-1
NewLife #:

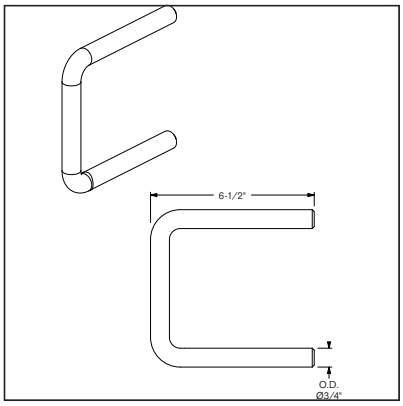

DESCRIPTION:
Twistlock, Handle, Bertolini Chassis, Replaces 20-45-1

MARTEC #:
2020103L
DCLI #:
TRAC #:
1107-1519-L
NewLife #:
1310614

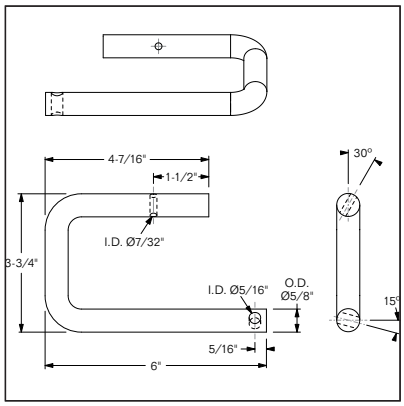

DESCRIPTION:
Twistlock, Handle, Replaces 20-103l

MARTEC #:
2020103R
DCLI #:
TRAC #:
1107-1519-R
NewLife #:
1310615

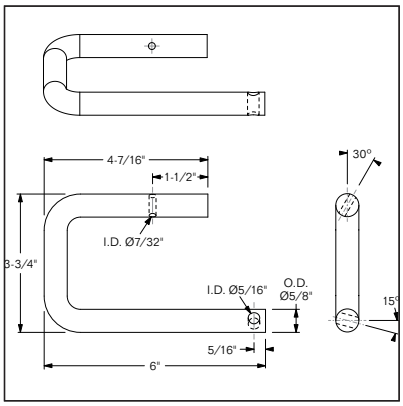

DESCRIPTION:
Twistlock, Handle, Replaces 20-103R

MARTEC #:
20BUF11314

DCLI #:
59-40-101

TRAC #:
1131-4

NewLife #:
1310452

DESCRIPTION:
Twistlock Handle 1131-4

MARTEC #:
20BUF32064

DCLI #:

TRAC #:
3206-4

NewLife #:
1310573

DESCRIPTION:
Twistlock, Handle, Replaces 20-130

MARTEC #:
202501

DCLI #:
59-30-103

TRAC #:
1108-1347

NewLife #:

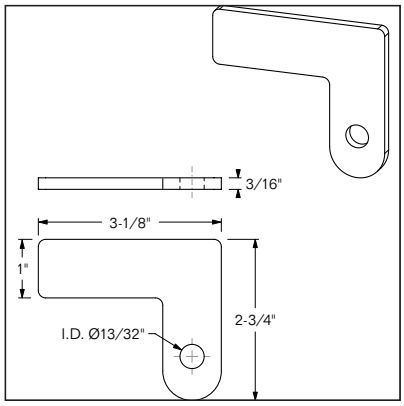

DESCRIPTION:
Twistlock, Latch, Replaces 25-01

MARTEC #:
202502

DCLI #:

TRAC #:
1108-1349

NewLife #:
1310476

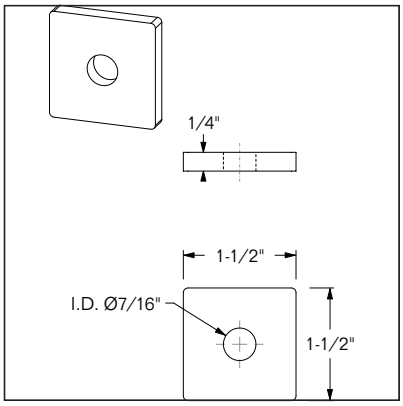

DESCRIPTION:
Twistlock, Latch, Square, Replaces 25-02

MARTEC #:
202503

DCLI #:
59-30-104

TRAC #:
1108-1348

NewLife #:
1310477

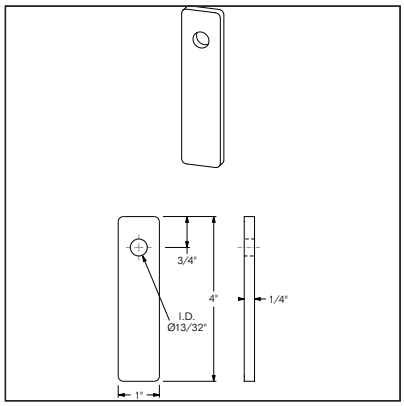

DESCRIPTION:
Twistlock, Latch, Rectangular, Replaces 25-03

MARTEC #:
169051779

DCLI #:
59-30-106

TRAC #:
1108-1345

NewLife #:
1310457

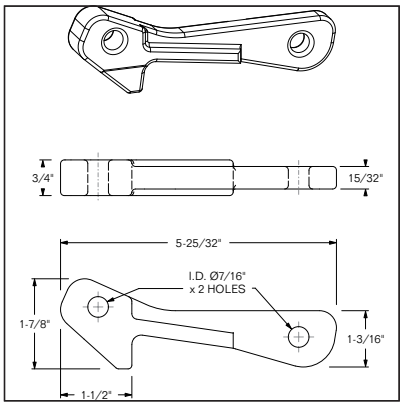

DESCRIPTION:
Twistlock, Latch, Replaces 25-06

MARTEC #:
202509LH

DCLI #:
59-30-108

TRAC #:
1108-1224-2L

NewLife #:
1310517

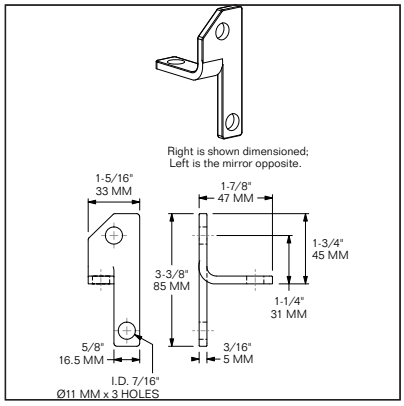

DESCRIPTION:
Twistlock, Latch, Replaces 25-09-LH

MARTEC #:
202509RH

DCLI #:

TRAC #:
1108-1224-2R

NewLife #:
1310518

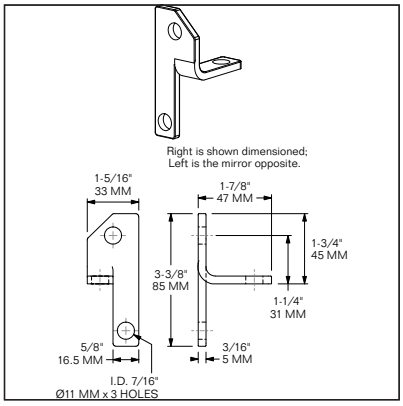

DESCRIPTION:
Twistlock, Latch, Replaces 25-09-RH

MARTEC #:
202513LH

DCLI #:
59-30-113

TRAC #:
1108-1225-2L

NewLife #:
1108-1225-2L

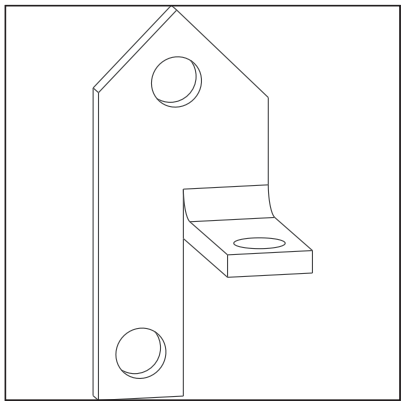

DESCRIPTION:
Twistlock Latch 25-13-LH

MARTEC #:
202513RH

DCLI #:
59-30-112

TRAC #:
1108-1225-2R

NewLife #:

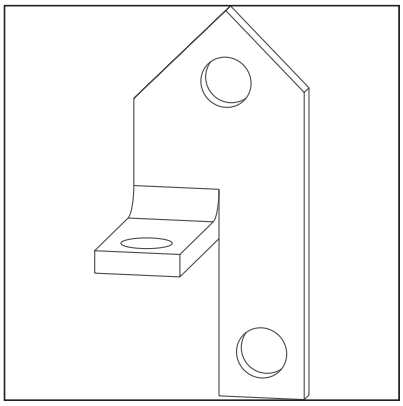

DESCRIPTION:
Twistlock Latch 25-13-RH

MARTEC #:
202521

DCLI #:
59-30-115

TRAC #:
1108-1465

NewLife #:
1310509

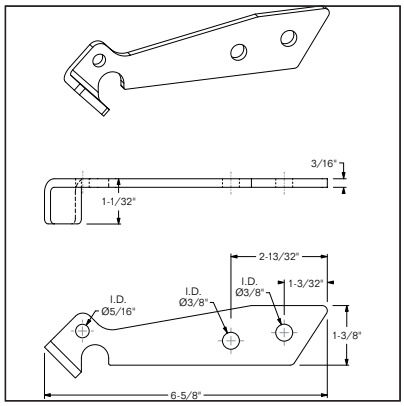

DESCRIPTION:
Twistlock, Latch, Replaces 25-21

MARTEC #:
20SL120718

DCLI #:
59-30-121

TRAC #:
1108-1207-18

NewLife #:
1310574

DESCRIPTION:
Twistlock, Safety Latch, Replaces 25-38, 1108-1207-18

MARTEC #:
169052061
DCLI #:
59-30-105
TRAC #:
1108-1404
NewLife #:
1310479

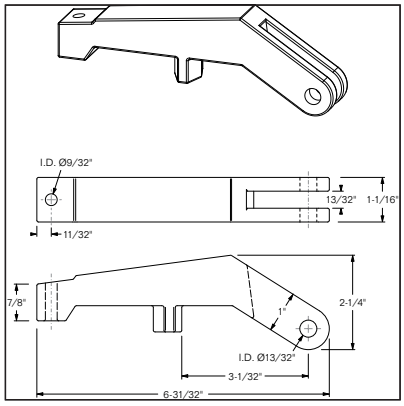

DESCRIPTION:
Twistlock, Latch, Replaces 25-05

MARTEC #:
202510
DCLI #:
59-30-110
TRAC #:
1108-1770
NewLife #:
1310545

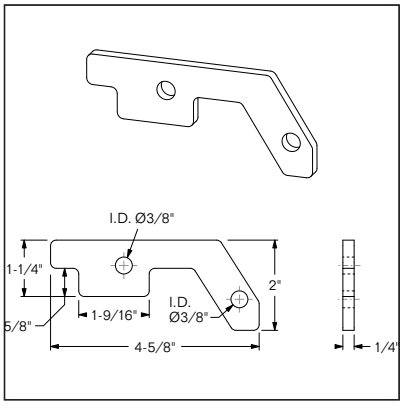

DESCRIPTION:
Twistlock, Latch, Replaces 25-10

MARTEC #:
169052382
DCLI #:
59-30-111
TRAC #:
1108-1350
NewLife #:
1310459

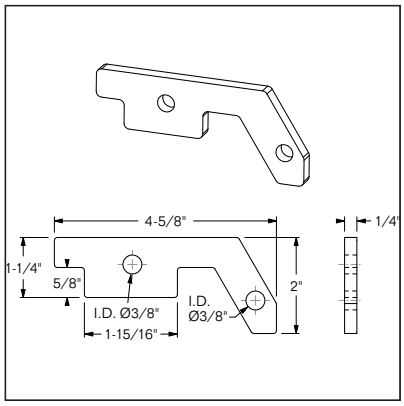

DESCRIPTION:
Twistlock, Latch, Replaces 25-11

MARTEC #:
202516
DCLI #:
59-30-114
TRAC #:
1108-1417-18
NewLife #:
1310522

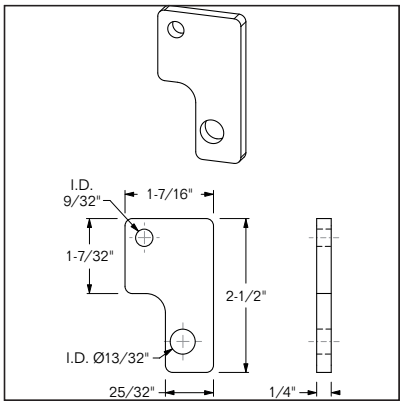

DESCRIPTION:
Twist Lock, Latch, Replaces 25-16

MARTEC #:
202528
DCLI #:
TRAC #:
1108-1268
NewLife #:
1310510

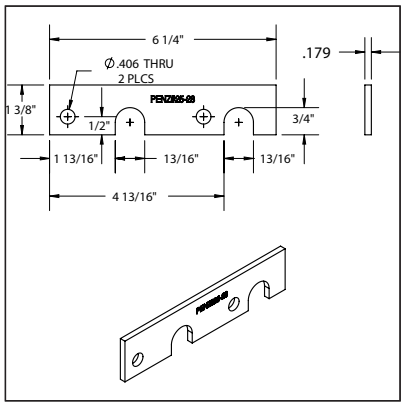

DESCRIPTION:
Twistlock, Latch, Replaces 25-28

MARTEC #:
202534
DCLI #:
59-30-118
TRAC #:
1108-2870
NewLife #:
1310580

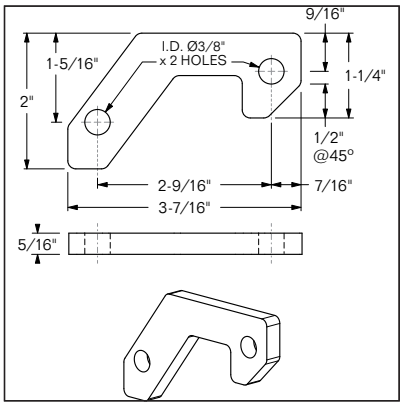

DESCRIPTION:
Twistlock, Latch, Replaces 25-34

MARTEC #:
20BUF117518
DCLI #:
59-30-102
TRAC #:
1108-1175-18
NewLife #:
1310480

DESCRIPTION:
Twistlock, Latch, Non Handed, Replaces 25-35

MARTEC #:
20BUF121318
DCLI #:
TRAC #:
1108-1213-18
NewLife #:
1310575

DESCRIPTION:
Twistlock, Latch

MARTEC #:
20SL113118
DCLI #:
59-30-101
TRAC #:
1108-1131-18
NewLife #:
1310547

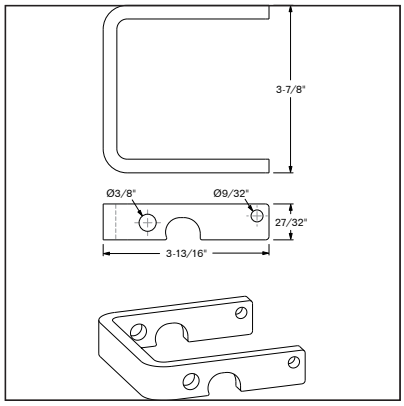

DESCRIPTION:
Twistlock Latch 1131-18

MARTEC #:
202507
DCLI #:
59-30-107
TRAC #:
1108-1849
NewLife #:
1310458

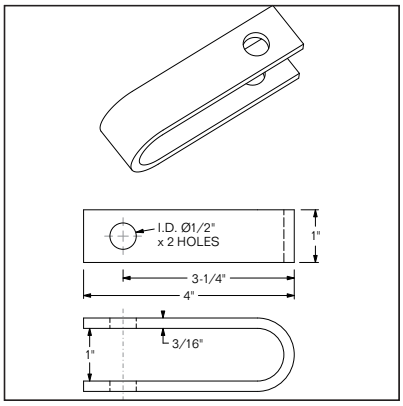

DESCRIPTION:
Twistlock, Latch, Replaces 25-07

MARTEC #:
201528LH
DCLI #:
TRAC #:
1105-1453-L
NewLife #:

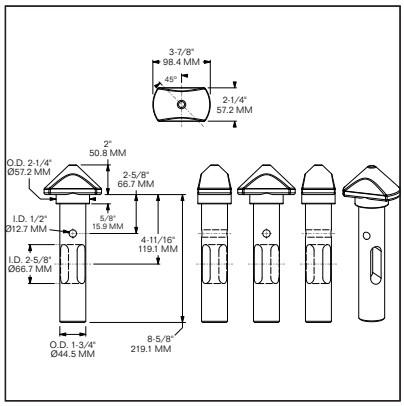

DESCRIPTION:
Twistlock Pin 15-28 LH (905-000-813L)

MARTEC #:
201528RH
DCLI #:
TRAC #:
1105-1453-R
NewLife #:

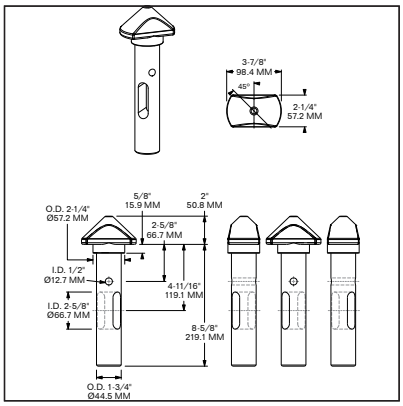

DESCRIPTION:
Twistlock Pin 15-28 RH (905-000-813R)

MARTEC #:
201554

DCLI #:

TRAC #:
1105-1538

NewLife #:

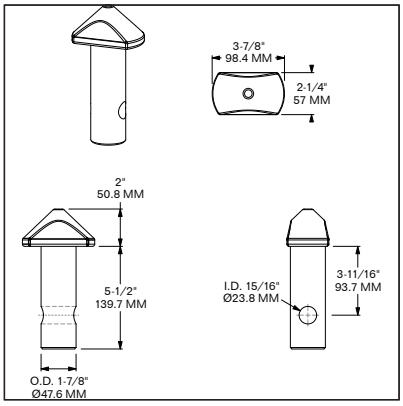

DESCRIPTION:
Twistlock Pin, Replaces 15-54

MARTEC #:
169052284

DCLI #:
59-20-116

TRAC #:
1105-1257-2

NewLife #:
1310421

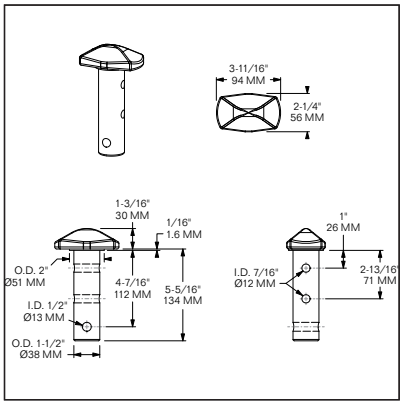

DESCRIPTION:
Twistlock, Pin, Replaces 15-69

MARTEC #:
201578

DCLI #:
59-20-117

TRAC #:
1105-1636

NewLife #:
1310505

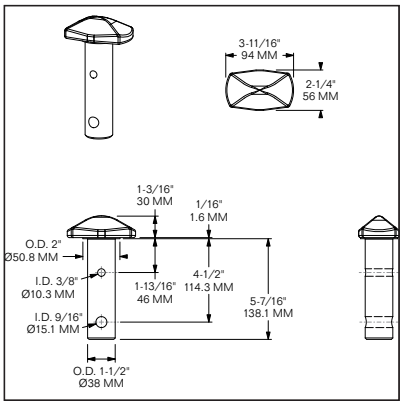

DESCRIPTION:
Twistlock, Pin, Replaces 15-78

MARTEC #:
2015110

DCLI #:

TRAC #:
1105-1301

NewLife #:
1310506

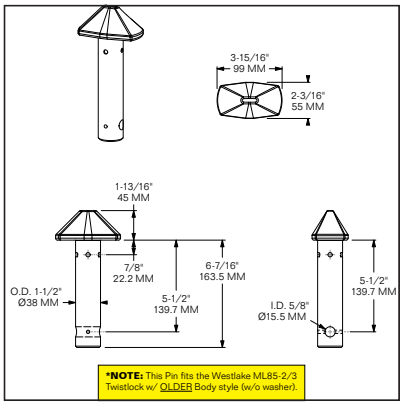

DESCRIPTION:
Twistlock, Pin, Replaces 15-110

MARTEC #:
2015123

DCLI #:

TRAC #:
1105-1508

NewLife #:
1310494

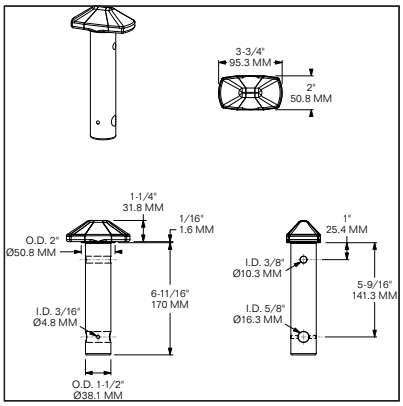

DESCRIPTION:
Twistlock, Pin, Replaces 15-123

MARTEC #:
2015130

DCLI #:
59-20-104

TRAC #:
1105-1450

NewLife #:
1310610

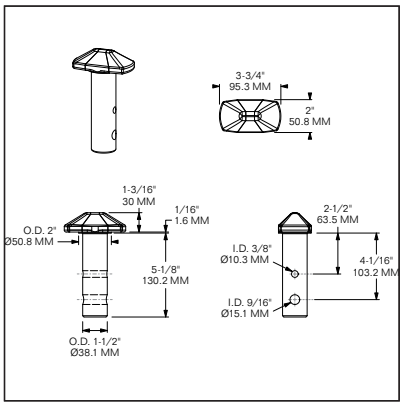

DESCRIPTION:
Twistlock, Pin, Replaces 15-130

MARTEC #:
20BUF11312
DCLI #:
59-20-101
TRAC #:
1105-1131-2
NewLife #:
1310484

DESCRIPTION:
Twistlock, Pin, Replaces 1131-2 Same as 2015157C

MARTEC #:
2015124
DCLI #:
TRAC #:
1105-1509
NewLife #:
1310611

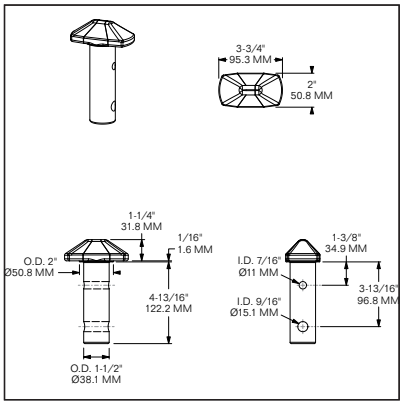

DESCRIPTION:
Twistlock, Pin, Replaces 15-124

MARTEC #:
201559LH
DCLI #:
59-20-113
TRAC #:
1105-1408L
NewLife #:

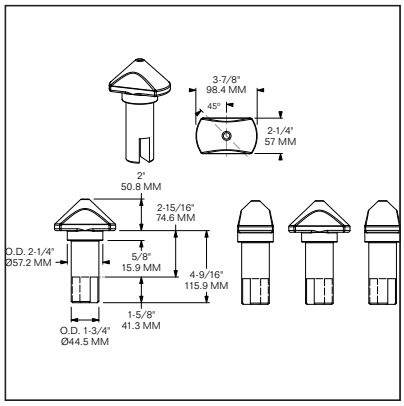

DESCRIPTION:
Twistlock Pin 15-59 LH (905-000-810)

MARTEC #:
201559RH
DCLI #:
59-20-114
TRAC #:
1105-1408R
NewLife #:

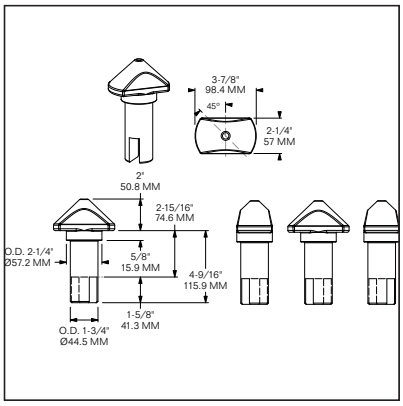

DESCRIPTION:
Twistlock Pin 15-59 RH (905-000-811)

MARTEC #:
20BUF35332
DCLI #:
TRAC #:
1105-3533-2
NewLife #:
1105-3533-2

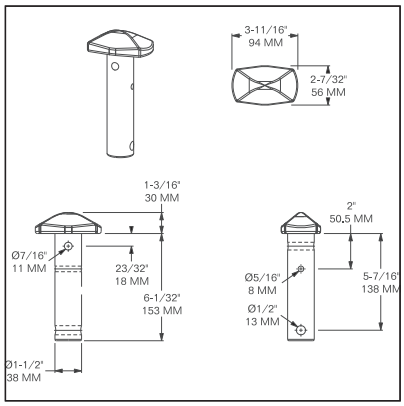

DESCRIPTION:
Twistlock Pin 3533-2

MARTEC #:
20BUF3533INNER
DCLI #:
TRAC #:
1105-3533INNER
NewLife #:

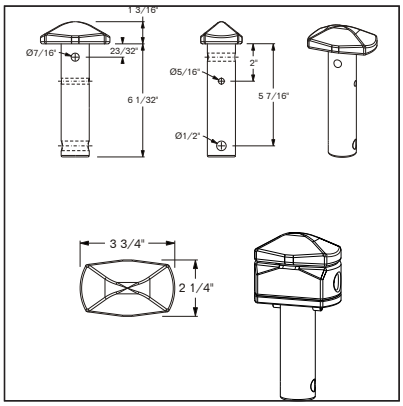

DESCRIPTION:
Twistlock Pin Without Handle

MARTEC #:
2015146

DCLI #:

TRAC #:
1105-2882

NewLife #:
1105-2882

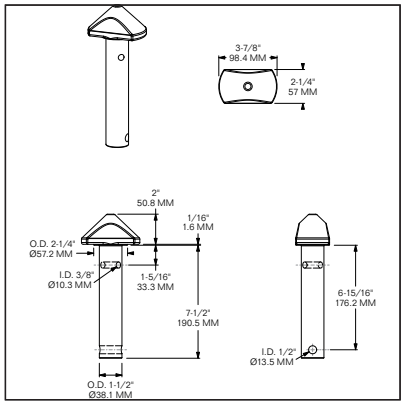

DESCRIPTION:
Twistlock Pin, Replaces 15-146

MARTEC #:
2020452

DCLI #:
59-10-101

TRAC #:
1106-1374-2

NewLife #:

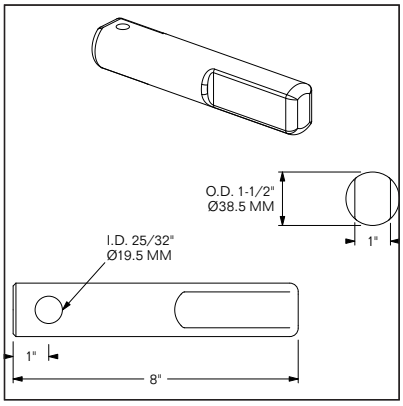

DESCRIPTION:
Twistlock, Pin for Pinlock, Bertolini Chassis, Replaces 20-45-2

MARTEC #:
202084

DCLI #:
59-10-108

TRAC #:
1106-1469

NewLife #:
1310598

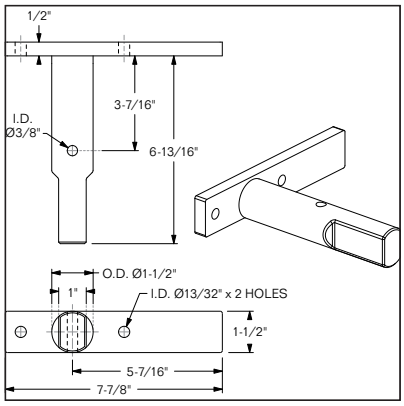

DESCRIPTION:
Twistlock, Front pin assy., Replaces 20-84

MARTEC #:
169051562

DCLI #:
59-10-103

TRAC #:
1106-1380

NewLife #:
1310462

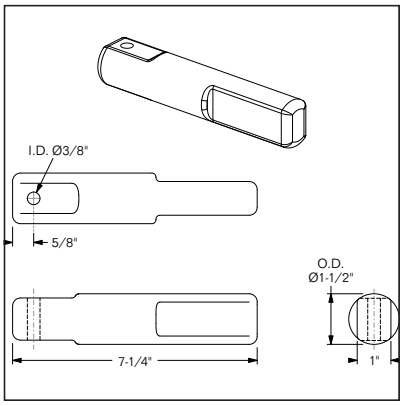

DESCRIPTION:
Twistlock Pin 905-156-002

MARTEC #:
20BUF14172

DCLI #:
14-50-112

TRAC #:
1106-1417-2

NewLife #:
1310571

DESCRIPTION:
Twistlock Pin 1417-2

MARTEC #:
20BUF1417L

DCLI #:
59-10-203

TRAC #:
1103-1417-L

NewLife #:
BUF1103-1417-L

DESCRIPTION:
Twistlock Pinlock Assy W/round Pin LH

MARTEC #:
20BUF1417R
DCLI #:
59-10-204
TRAC #:
1103-1417-R
NewLife #:
BUF1103-1417-R

DESCRIPTION:
Twistlock Pinlock Assy W/round Pin RH

MARTEC #:
20BUF1213L
DCLI #:
59-10-205
TRAC #:
1103-1213-L
NewLife #:
1310556

DESCRIPTION:
Twistlock Assembly Front Left

MARTEC #:
20BUF1213R
DCLI #:
59-10-206
TRAC #:
1103-1213-R
NewLife #:
1310557

DESCRIPTION:
Twistlock Assembly Front Right

MARTEC #:
209001LH
DCLI #:
TRAC #:
1103-1642-L
NewLife #:

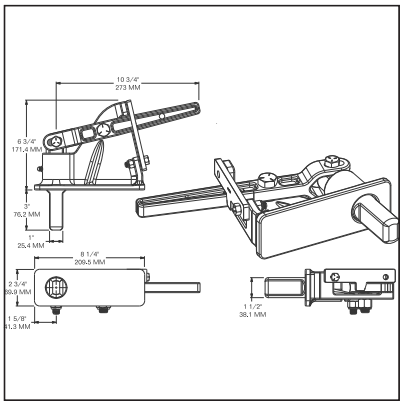

DESCRIPTION:
Twistlock Pin Assy 90-01LH

MARTEC #:
209001RH
DCLI #:
TRAC #:
1103-1642-R
NewLife #:

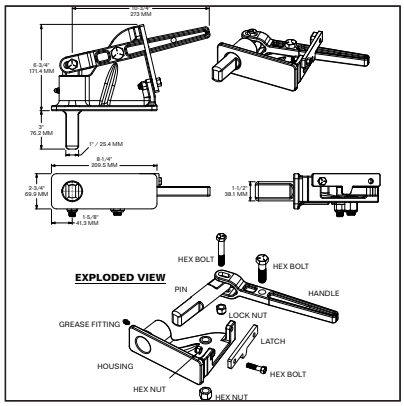

DESCRIPTION:
Twistlock Pin Assy 90-01RH

Martec Alphabetical Part Index

20BUF1213L 11
20BUF1213R 11
20BUF1341 2
20BUF1417L 10
20BUF1417R 11
20BUF3533INNER 9
20BUF11312 9
20BUF11314 4
20BUF12074 3
20BUF14172 10
20BUF32064 4
20BUF35332 9
20BUF117518 7
20BUF121318 7
20SL113118 7
20SL120718 5
201528LH 7
201528RH 7
201554 8
201559LH 9
201559RH 9
201578 8
202058 1
202084 1
202084 10
202098LH 1
202098RH 2
202501 4
202502 4
202503 4
202507 7
202509LH 5
202509RH 5
202510 6
202513LH 5
202513RH 5
202516 6
202521 5
202528 6
202534 6
209001LH 11
209001RH 11
2015110 8
2015123 8
2015124 9
2015130 8
2015146 10
2020103L 3
2020103R 3
2020108LH 2
2020108RH 2
2020113L 2
2020113R 2
2020114LH 3
2020114RH 3
2020451 3
2020452 10
169051562 10
169051563 1
169051773 1
169051779 4
169052061 6
169052281 1
169052284 8
169052382 6

DCLI Alphabetical Part Index

14-50-112 10
59-10-101 10
59-10-103 10
59-10-108 1
59-10-108 10
59-10-203 10
59-10-204 11
59-10-205 11
59-10-206 11
59-20-101 9
59-20-104 8
59-20-113 9
59-20-114 9
59-20-116 8
59-20-117 8
59-30-101 7
59-30-102 7
59-30-103 4
59-30-104 4
59-30-105 6
59-30-106 4
59-30-107 7
59-30-108 5
59-30-110 6
59-30-111 6
59-30-112 5
59-30-113 5
59-30-114 6
59-30-115 5
59-30-118 6
59-30-121 5
59-40-101 4
59-40-102 1
59-40-107 2
59-40-108 2
59-40-109 2
59-40-110 2
59-40-111 3
59-40-112 3
59-40-114 3
59-40-119 1
59-40-120 1
59-40-125 1
59-40-126 2
59-40-202 3

martec international

NewLife Alphabetical Part Index

1105-2882 10
1105-3533-2 9
1108-1225-2L 5
1310421 8
1310447 1
1310448 1
1310450 1
1310452 4
1310457 4
1310458 7
1310459 6
1310462 10
1310469 1
1310470 2
1310470 2
1310471 2
1310476 4
1310477 4
1310479 6
1310480 7
1310483 3
1310484 9
1310494 8
1310505 8
1310506 8
1310508 2
1310509 5
1310510 6
1310517 5
1310518 5
1310522 6
1310545 6
1310547 7
1310556 11
1310557 11
1310571 10
1310573 4
1310574 5
1310575 7
1310580 6
1310598 1
1310598 10
1310607 3
1310608 3
1310610 8
1310611 9
1310612 2
1310613 2
1310614 3
1310615 3
1310622 1
BUF1103-1417-L 10
BUF1103-1417-R 11

martec international

DISCLAIMER

THE INFORMATION CONTAINED IN THIS CATALOG, TO THE BEST OF OUR KNOWLEDGE, IS CORRECT. GREAT PAINS HAVE BEEN TAKEN IN PROOFING THIS INFORMATION. HOWEVER, MARTEC DOES NOT GUARANTEE THE ENCLOSED DATA.
ILLUSTRATIONS AND SIMILAR DATA IN THIS CATALOG ARE INTENDED ONLY AS AN AID IN IDENTIFYING GENERAL CONFIGURATIONS AND HAVE BEEN OBTAINED AND DEVELOPED FROM SUPPLIER DATA.
ALTHOUGH MARTEC BELIEVES THAT SUCH ILLUSTRATIONS ARE ACCURATE, AND DATA CORRECT, ERRORS MAY EXIST AND FURTHER VERIFICATION OF THE PART MAY BE NECESSARY.

martec

international